FIXTURES

Medium Flood

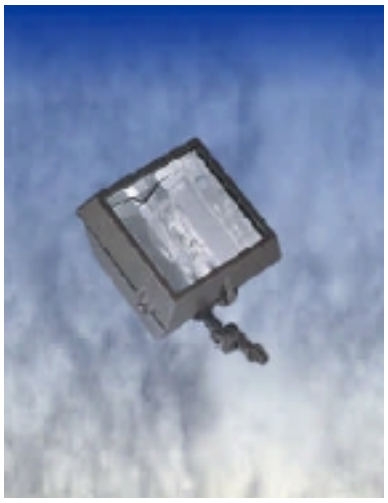

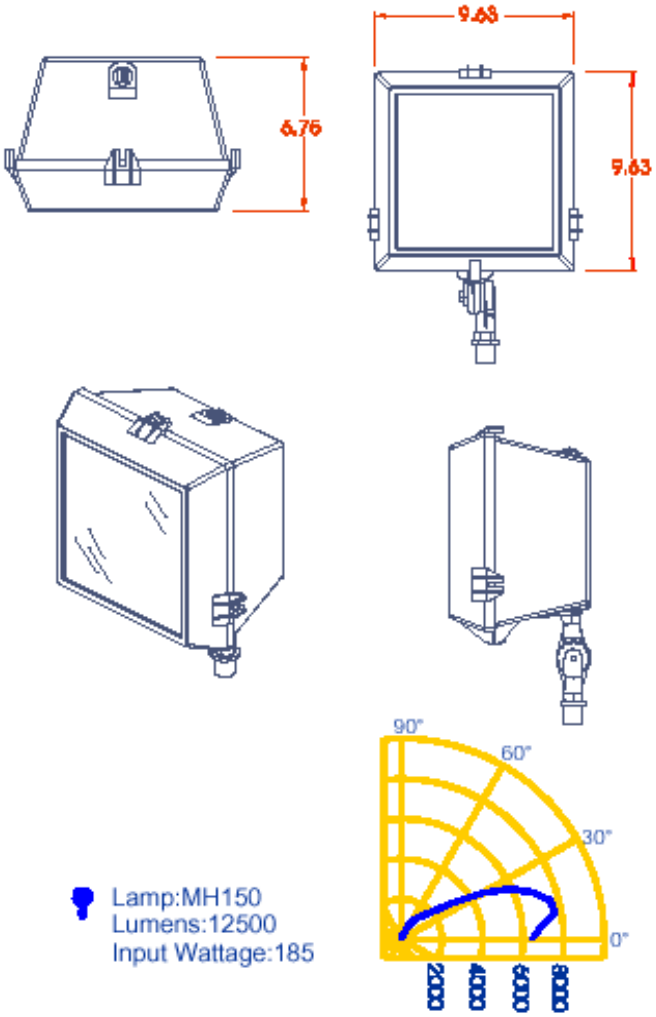

Features

Die cast aluminum dark bronze housing, hinged door with tempered glass lens, moisture and dust proof, anodized aluminum reflector. Threaded ½“ apertures securing conduit and installing photocell. Heavy duty swivel provides directional flexibility.

Applications

Parking areas, perimeter lighting, Entrances and walkways, waterfronts, loading platforms, recreational areas, flag lighting, roof lighting.

Electrical

U.L. Listed for wet and damp locations.

High Pressure Sodium				
Watts	Bulb/Base	Lumens	Catalog #	NSN
35	ED-17/Medium		NWLT35HPSMFL	
70	ED-17/Medium		NWLT50HPSMFL	
70	ED-17/Medium	6300	NWLT70HPSMFL	6210-01-462-2397
100	ED-17/Medium	9500	NWLT100HPSMFL	6210-01-462-2399
150	ED-17/Medium	16000	NWLT150HPSMFL	6210-01-462-2401
Metal Halide				
35	ED-17/Medium		NWLT35MHMFL	
50	ED-17/Medium	3200	NWLT50MHMFL	6210-01-462-2404
70	ED-17/Medium	5000	NWLT70MHMFL	6210-01-462-2407
100	ED-17/Medium	8500	NWLT100MHMFL	6210-01-462-2408
150	ED-17/Medium		NWLT150MHMFL	
175	ED-17/Medium	14000	NWLT175MHMFL	6210-01-462-2410