Compact Fluorescent Lamps*

*Lamps only, ballast or screw in adapter is required.

Abbreviations	
DTT	Double Twin Tubes
LTT	Long Twin Tube
TT	Twin Tube

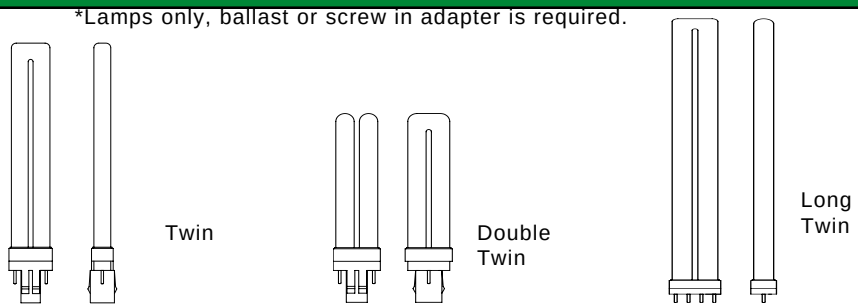

WATTS	LAMP	COLOR/CRI	M.O.L. (Inches)	AVG LIFE	INITIAL LUMENS	BASE	NATIONAL STOCK NUMBER
TWIN TUBE LAMPS, PREHEAT - STARTER IN LAMP BASE FOR USE WITH MAGNETIC BALLASTS ONLY							
5	TT	2700K, CRI 82	4.125	10000	250	G23	6240-01-344-9531
5	TT	4100K, CRI 85	4.125	10000	250	G23	6240-01-352-0432
7	TT	2700K, CRI 82	5.3125	10000	400	G23	6240-01-306-8247
7	TT	3500K, CRI 82	5.3125	10000	400	G23	6240-01-352-0433
7	TT	4100K, CRI 85	5.3125	10000	400	G23	6240-01-352-0434
9	TT	2700K, CRI 82	6.5	10000	600	G23	6240-01-344-9532
9	TT	3500K, CRI 82	6.5	10000	600	G23	6240-01-352-0435
9	TT	4100K, CRI 85	6.5	10000	600	G23	6240-01-352-0436
13	TT	2700K, CRI 85	7.4375	10000	900	GX23	6240-01-344-9533
13	TT	3500K, CRI 85	7.4375	10000	900	GX23	6240-01-353-7759
13	TT	4100K, CRI 85	7.4375	10000	900	GX23	6240-01-352-0437
DOUBLE TWIN TUBE LAMPS, PREHEAT - STARTER IN LAMP BASE FOR USE WITH MAGNETIC BALLASTS ONLY							
9	DTT	2700K, CRI 82	4.4	10000	575	G23-2	6240-01-383-4126
9	DTT	3500K, CRI 85	4.4	10000	575	G23-2	6240-01-383-4135
13	DTT	2700K, CRI 82	5.8	10000	900	GX23-2	6240-01-345-2252
13	DTT	3500K, CRI 82	5.8	10000	900	GX23-2	6240-01-352-0438
13	DTT	4100K, CRI 85	5.8	10000	900	GX23-2	6240-01-383-4202
18	DTT	2700K, CRI 82	6.8	10000	1250	G24d-2	6240-01-345-2251
18	DTT	3500K, CRI 85	6.8	10000	1200	G24d-2	6240-01-352-0439
18	DTT	4100K, CRI 82	6.8	10000	1250	G24d-2	6240-01-352-0440
26	DTT	2700K, CRI 82	7.6	10000	1800	G24d-3	6240-01-345-9535
26	DTT	3500K, CRI 82	7.6	10000	1800	G24d-3	6240-01-353-7760
26	DTT	4100K, CRI 82	7.6	10000	1800	G24d-3	6240-01-352-0441
LONG TWIN TUBE LAMPS, HIGH LUMEN, RAPID START							
40	LTT	3000K, CRI 82	22.5	20000	3150	2G11	6240-01-353-7703
40	LTT	3500K, CRI 82	22.5	20000	3150	2G11	6240-01-353-7704
40	LTT	4100K, CRI 82	22.5	20000	3150	2G11	6240-01-353-7705

All operating and physical characteristics for items in this section were provided by the manufacturer's of these products.
Use of these lamps with electronic ballasts will reduce the lamp life and may fail anytime.

Compact Fluorescent Lamps*

Abbreviations	
DTT	Double Twin Tubes
LTT	Long Twin Tube
TT	Twin Tube

* Lamps only, ballast and screwin Adapter is required.

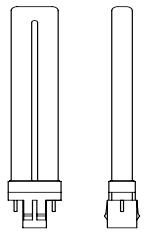

Twin Tube

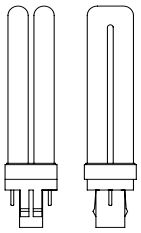

Double Twin Tube

WATTS	LAMP	COLOR/CRI	M.O.L. (Inches)	AVG LIFE	INITIAL LUMENS	BASE	NATIONAL STOCK NUMBER
TWIN TUBE LAMPS, WITHOUT INTERNAL STARTER IN LAMP BASE FOR USE WITH DIMMING & ELECTRONIC BALLASTS ONLY							
5	TT	2700K, CRI 82	3.4	10000	250	2G7	**6240-01-419-7725**
5	TT	4100K, CRI 85	3.4	10000	250	2G7	**6240-01-419-7729**
7	TT	2700K, CRI 82	4.5	10000	400	2G7	**6240-01-419-7731**
7	TT	4100K, CRI 85	4.5	10000	400	2G7	**6240-01-419-7732**
9	TT	2700K, CRI 82	6.5	10000	600	2G7	**6240-01-419-7735**
9	TT	4100K, CRI 85	6.5	10000	600	2G7	**6240-01-419-7779**
13	TT	2700K, CRI 85	6.9	10000	900	2GX7	**6240-01-419-7784**
13	TT	3000K, CRI 85	6.9	10000	900	2GX7	**6240-01-419-7793**
13	TT	4100K, CRI 85	6.9	10000	900	2GX7	**6240-01-419-7798**
DOUBLE TWIN TUBE LAMPS, WITHOUT INTERNAL STARTER IN LAMP BASE FOR USE WITH DIMMING & ELECTRONIC BALLASTS							
10	DTT	2700K, CRI 82	4.6	10000	600	G24q-1	**6240-01-419-5622**
10	DTT	300K, CRI 85	4.6	10000	600	G24q-1	**6240-01-419-5625**
10	DTT	3500K, CRI 85	4.6	10000	600	G24q-1	**6240-01-419-5626**
10	DTT	4100K, CRI 85	4.6	10000	600	G24q-1	**6240-01-419-5258**
9	DTT	2800K, CRI 84	3.125	12000	650	FOUR PIN[1]	**6240-01-394-5319**
13	DTT	2800K, CRI 84	3.75	12000	900	FOUR PIN[1]	**6240-01-394-5320**
13	DTT	2700K, CRI 82	6	10000	900	GX24q-1	**6240-01-419-5260**
13	DTT	3000K, CRI 85	6	10000	900	G24q-1	**6240-01-419-5262**
13	DTT	3500K, CRI 85	6	10000	900	GX24q-1	**6240-01-419-5267**
13	DTT	4100K, CRI 85	6	10000	900	GX24q-1	**6240-01-419-5270**
18	DTT	2800K,CRI 84	4.5	12000	1260	FOUR PIN[1]	**6240-01-394-5323**
18	DTT	2700K, CRI 82	6.8	10000	1250	G24d-2	**6240-01-419-5274** †
18	DTT	3000K, CRI 85	6.8	10000	1250	G24d-2	**6240-01-419-5277**
18	DTT	3500K, CRI 85	6.8	10000	1250	G24d-2	**6240-01-419-5279**
18	DTT	4100K, CRI 85	6.8	10000	1250	G24d-2	**6240-01-419-5369**
26	DTT	2700K, CRI 82	7.6	10000	1800	G24q-3	**6240-01-419-5411**
26	DTT	3000K, CRI 85	7.6	10000	1800	G24q-3	**6240-01-419-5414**
26	DTT	3500K, CRI 82	7.6	10000	1800	G24d-3	**6240-01-419-5416**
26	DTT	4100K, CRI 82	7.6	10000	1800	G24d-3	**6240-01-419-5490**
27	DTT	2800K, CRI 84	4.875	12000	1650	FOUR PIN[1]	**6240-01-394-5322**

All operating and physical characteristics for items in this section were provided by the manufacturer's of these products.

Lamp Holders and Screw-in Adapters

• Lamp Holders

DESCRIPTION	LAMP WATTAGE AND BASE ACCOMMODATED	NATIONAL STOCK NUMBER
HORIZONTAL SCREW-MOUNT	5, 7 OR 9 WATT, G23 BASE	**6250-01-352-1526**
	13 WATT, GX23 BASE	**6250-01-352-1527**
VERTICAL SCREW-MOUNT	5,7 OR 9 WATT, G23 BASE	**6250-01-353-4469**
	13 WATT, GX23 BASE	**6250-01-353-4470**
	18 WATT, G240-2 BASE	**6250-01-352-1528**
	26 WATT, G240-3 BASE	**6250-01-352-1529**

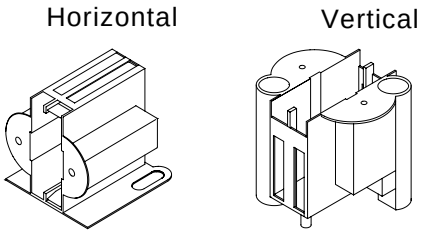

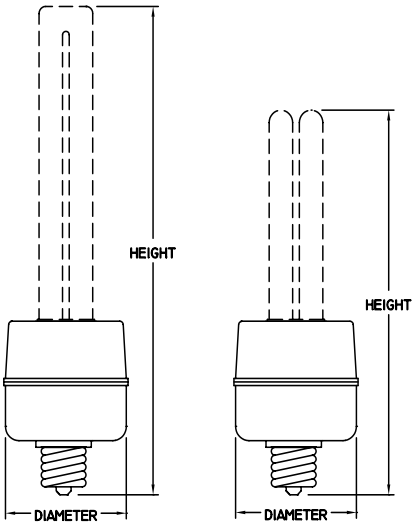

• Screw-in Adapters

- 50,000 hour average life.
- Magnetic, NPF, toroidal ballast.
- Maximum ambient temperature: 140 F
- UL approved.
- Order lamps separately.

DESCRIPTION	BALLAST LOSSES	MAX. LENGTH WITH LAMPS (Inches)	MAX DIAMETE-R	MIN START TEMP. (F)	NATIONAL STOCK NUMBER	
5 Watt Adapter, use with 5W twin tube lamps.	1.9	5.5	2	0	**6250-01-381-7058**	†
7 Watt Adapter, use with 7W twin tube lamps.	1.5	6.5	2	0	**6250-01-381-7189**	†
9 Watt Adapter, use with 9W twin tube or 9W double twin tube lamps.	1.5	8.5 Twin Tube Lamp 5.5 Double Twin Tube	2	0	**6250-01-381-6782**	†
13Watt Adapter, use with 13W twin or double twin tube lamps	2.3	8.9 - Twin Tube 6.2 - Double Twin Tube	2.4	0	**6250-01-381-6840**	†

† For use with lamps made by Lights of America. The average life for these units is 75,000 hours.
All operating and physical characteristics for items in this section were provided by the manufacturers of these products.